Build your own guitar pedal: An introduction to electronics

Matt Gray
dev@graybloomfield.com
www.graybloomfield.com/guitar/

Why guitar pedals?

Audience interaction time! Who plays guitar?

I don’t! I started building pedals for my kid. Here he is doing some Alestorm song (age 8 at the time)

Introduction to electronics

- Circuits and schematics
- Power, voltage and current
- Components

Circuit basics

- A circuit contains
  - a power supply
  - something for electricity to flow through
  - usually, components to do something useful with the electricity

Circuit basics

Power supplies

- A power supply provides **voltage** to a circuit - measured in **Volts (V)**
- Voltage is how much potential electricity there is available between two points.
- A power supply will have two connections - positive (red, **+**) and negative (black, **-**)
- When we make a circuit, electricity flows the point with the highest voltage to the lowest voltage
- If we don't have a connection from **+** to **-**, then no electricity will flow, and nothing will happen.

Circuit basics

Power supplies

Circuit basics

Conductors

- To make a circuit, we need to make a path between the two sides of the power supply with a **conductor**
- This is usually metal in the form of wires
- Other things can conduct electricity - try sticking the 9v battery on your tongue
- Once we have a connection, electricity will start to flow. The flow of electricity is called **current** and is measured in **Amperes** or **Amps (A)**

Wires are usually made out of copper, or other metals with copper blended in. They might have a plastic later on the outside to act as an insulator - that makes sure that current doesn't short out onto anything unexpected that the wire might rub against.

Circuit basics

Schematics

- **Schematics** are drawings of circuits

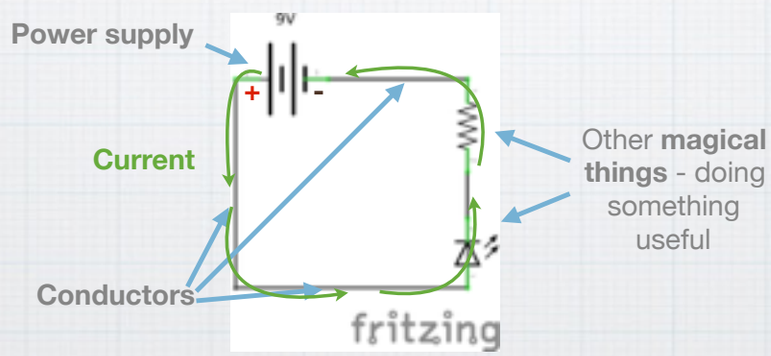

Schematics

- Some **really boring** circuit schematics

A **short circuit**

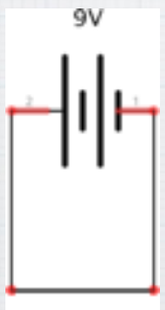

This one is a really bad idea. Don't do this.

An **open circuit**

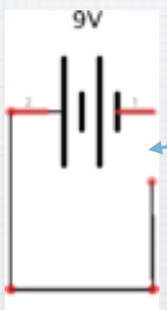

Nothing happens, because there is no way for current to flow from one side of the power supply to the other

Schematics

- If two (or more) parts are connected, it doesn't really matter how you lay them out physically. Just as long as they are connected to the same thing as the schematic.

This circuit:

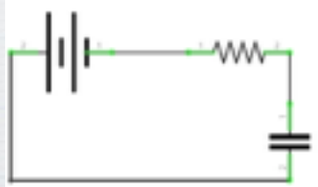

Does the same as **this circuit:**

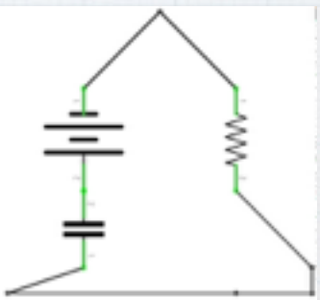

Components

- The **magical bits** doing something useful
  - They might reduce, redirect, or amplify the flow of electricity
  - They might store electricity and release it later
  - They might do something physical… like light up, or spin, or make noise

Components

Resistors

- Restrict the flow of electricity between two points
- Measured in Ohms - Ω
  - 100Ω doesn't resist much
  - 100kΩ resists a bit
  - 1MΩ resists a lot
- Values are encoded in coloured bands

Components

Resistors

Black	0
Brown	1
Red	2
Orange	3
Yellow	4
Green	5
Blue	6
Violet	7
Grey	8
White	9

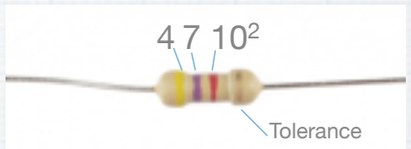

Yellow = 4
Violet = 7
Red = 10^2

47 x 100 = 4700Ω
4.7kΩ ±5%

https://en.wikipedia.org/wiki/Electronic_color_code

Resistors

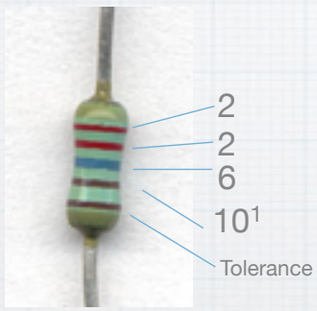

Red = 2
Red = 2
Blue = 6
Brown = 10^1

226 x 10 = 2260Ω
2.26kΩ ±1%

Sometimes, 2.26k will be written 2k26. It's just a thing that people do.

Resistors

Or… search the internet or app store for
‘**Resistor calculator**’

Components

Resistors

- Resistors come in different sizes and power ratings
- **1/4W is fine for hobby electronics, and guitar stuff**
- 1/8W are tiny
- 1/2W are big

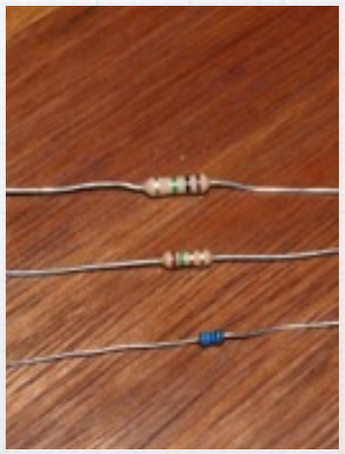

Components

Variable Resistors

- Some resistors have changeable values - yay volume knobs!
- Called variable resistors, potentiometers, pots, trimpots, trimmers, varpots…
- Value changes from a maximum resistance to 0

Components

Variable Resistors

Example:
100kΩ variable
resistor

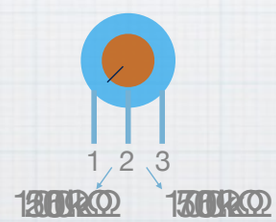

Components

Variable Resistors

- Variable resistors can have a different **taper**
- This changes how quickly the value will change as you rotate the knob
- If you have an effect that has most of the change happening in a small part of the rotation, it's probably the wrong taper

Taper	Label	
Linear	B	Steady change as you rotate the knob
Log (Audio)	A	Slow at first, then really quick at the end
Anti-log	C	Quick at first, then really slow at the end

Why is this stuff important? Turns out that the human ear detects changes in volume on a log scale. To make things sound louder for an ear, you need to increase the volume more and more as you go up. So for a volume knob, you will definitely need a log (or audio) pot.
The log scale is also seen in the decibel scale used to measure loudness.

Components

LEDs

- **L**ight **E**mitting **D**iodes
- They light up - duh!
- More current flowing through an LED means more light
- LEDs have a **maximum current** value (usually 20mA), and a **voltage drop** value (usually about 2v)
- Too much current = 😵

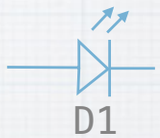

Components

LEDs

- We can use a resistor to limit the current flowing through our LED - **so it doesn't fry**

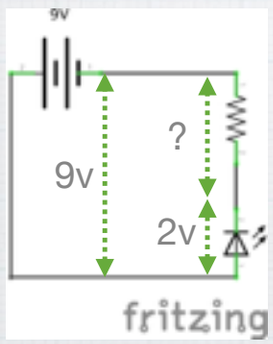

- The resistor will get 7v in this circuit
- We want 20mA to flow (0.02A)
- We can use **Ohm's Law** to work out the resistor value

Resistance = Volts / Amps

R = 7 / 0.02

R = **350Ω**

Keep in mind that the 20mA is probably the maximum current you want to send through the LED - so that will make the LED at it's brightest. You may be better with 10mA. Redo the calculations with that value… R = 7 / 0.01 = 700 ohms. You could probably try a 1k resistor and see if it is too bright or too dull for you liking.

Components

LEDs

- LEDs have **polarity** - they only work one way
- If you insert an LED backwards, it won't light up
- It will actually stop the current flowing if you put it in reversed - it acts like a break in your circuit

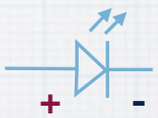

Components

Breadboards

- A **breadboard** makes it easy to quickly stick components together
- They usually have two rows at the top and bottom to connect to your power supply
- Other holes are connected in vertical strips
- We can make connections with components or **jumper** wires

Build 1.

Let’s light up an LED
(without frying it)

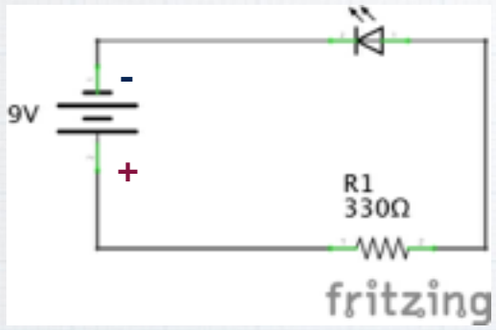

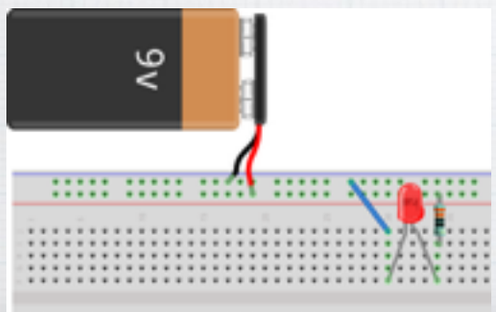

- Red wire is positive
- Black wire is negative
- 330Ω = orange orange black black
- LED - short leg goes to negative power
- Use one or more wires to complete the circuit

Start by connecting your power supply to the power rows at the top of the board.
Then put the resistor into place - one leg goes into the positive power row, the other one into a free column on the board.
Now connect the LED to the same column as the resistor… then complete the circuit by using a jumper wire.

Build 2.

Varying the LED brightness

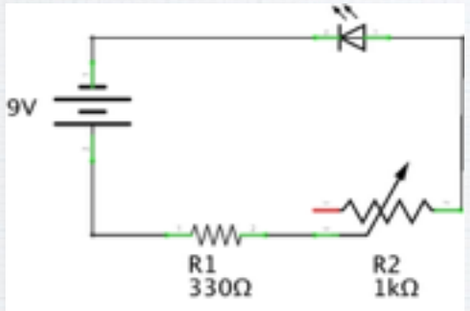

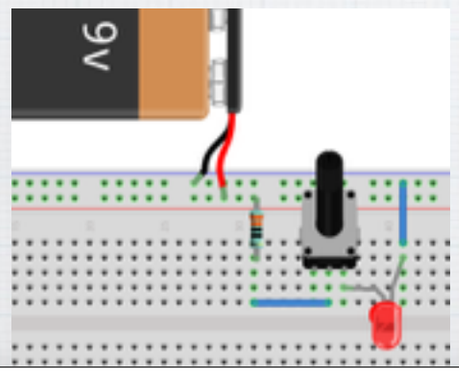

- Adding another resistor will make the LED less bright
- Using a variable resistor means we can vary the brightness
- These two resistors are in **series** with each other, so their values are added together

Components

Capacitors

- Store electricity and let it go later.
  They **charge** and **discharge**.
- Measured in Farads - **F**
  - **pF** - pico Farads - small
  - **nF** - nano Farads - medium
  - **µF** - micro Farads - large

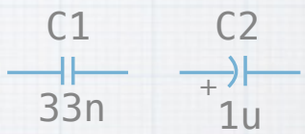

Capacitors

- **µF** capacitors are usually **electrolytic** (sometimes **tantalum**)

- **nF** capacitors are usually **film** or **ceramic**

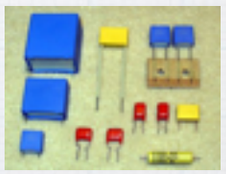

- **pF** capacitors are usually **ceramic**

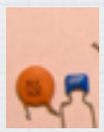

Components

Capacitors

- **Electrolytic** capacitors have polarity. The negative side is marked
- Putting them in **backwards is bad**. They can heat up/explode/burst.
- The capacitance value is printed on the side
- A maximum voltage is written on the side. Make sure you buy capacitors with a voltage rating that is **higher** than your circuit. It doesn't matter how much higher.

Components

Capacitors

- **Film and ceramic** capacitors have no polarity. There is no backwards
- The capacitance may be a three number code - e.g. ‘104’
- Search for ‘capacitor calculator’
- Or it might be written something like ‘2µ2’ - this means 2.2µF

10×10^4
10 x 10000
100,000pF
100nF
0.1µF
µ1

Again, you can find sites on the internet that will convert these codes for you, or get an app.

Capacitors

OK, sure. But why? What are they useful for?

- Protecting your other components from varying power supply
- Filtering audio signals - letting through only high or low frequencies

Schematics - revisit

- A few more symbols that you may see

Ground

This means '*connect all these bits together*' and for our purposes, connect to the negative terminal of the power supply.

A circuit will usually have more than one point connected to ground, so it's easier to draw this way.

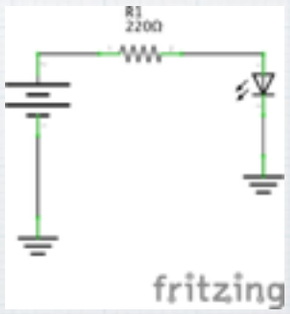

Circuit basics

Schematics - revisit

V+

This means '*connect all these bits to the positive power*'

Vb or V_{bias}

This means '*connect all these bits to a special voltage*' - the **bias** voltage. Usually half way between maximum and minimum voltage.

This one means '*connect all the points with the same label*'

Components

Diodes

- **LEDs that don't light up**
- Diodes have **polarity** - they only work one way
- A stripe marks the negative side
- They will only let current pass through them in one direction
- It's like a little valve in the circuit
- Diodes have a model number, usually starting with "1N". The model number is printed on the diode.

Components

Diodes

- While ideally diodes would let all the current pass in one direction, and none in the other, **diodes aren't perfect**
- We can use that imperfection in our circuits

The 'ideal' diode

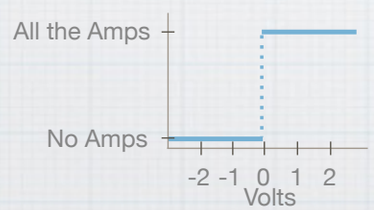

Real world diodes

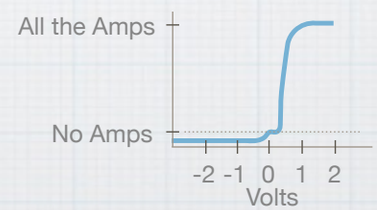

A real world diode will let a small amount of current flow in reverse direction. Not much, but still measurable. For small positive voltages, it may block current until it hits a certain voltage, then it lets it all through.
Each diode type has it's own little graph like this.

Components

Transistors

- **Transistors** are basically tiny little switches
- If you put current on the **base** pin, then current is allowed to flow from the **collector** to the **emitter**
- They can also be used to **amplify** - a tiny current fluctuation can trigger a large current change (**gain**)

Components

Transistors

- Transistors can be **NPN** or **PNP** - we are using NPN in the workshop
- Different transistors have different gains, current ratings, and voltage behaviour.
- Transistors have a model number - printed on the front. They will usually start with '2N' but might start with other letters e.g. 2N3904, 2N5088
- Different transistor models may have the **base, emitter** and **collector** in different places
- To work out which pin is which, do a search for a **datasheet** for that model:

  "**2n3904 datasheet**" or "**2n3904 pinout**"

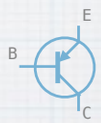

PNP

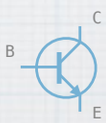

NPN

Make sure you know which pin is which on your transistors. It will vary from model to model, and putting a transistor in backwards will often be the cause of your circuit not working.

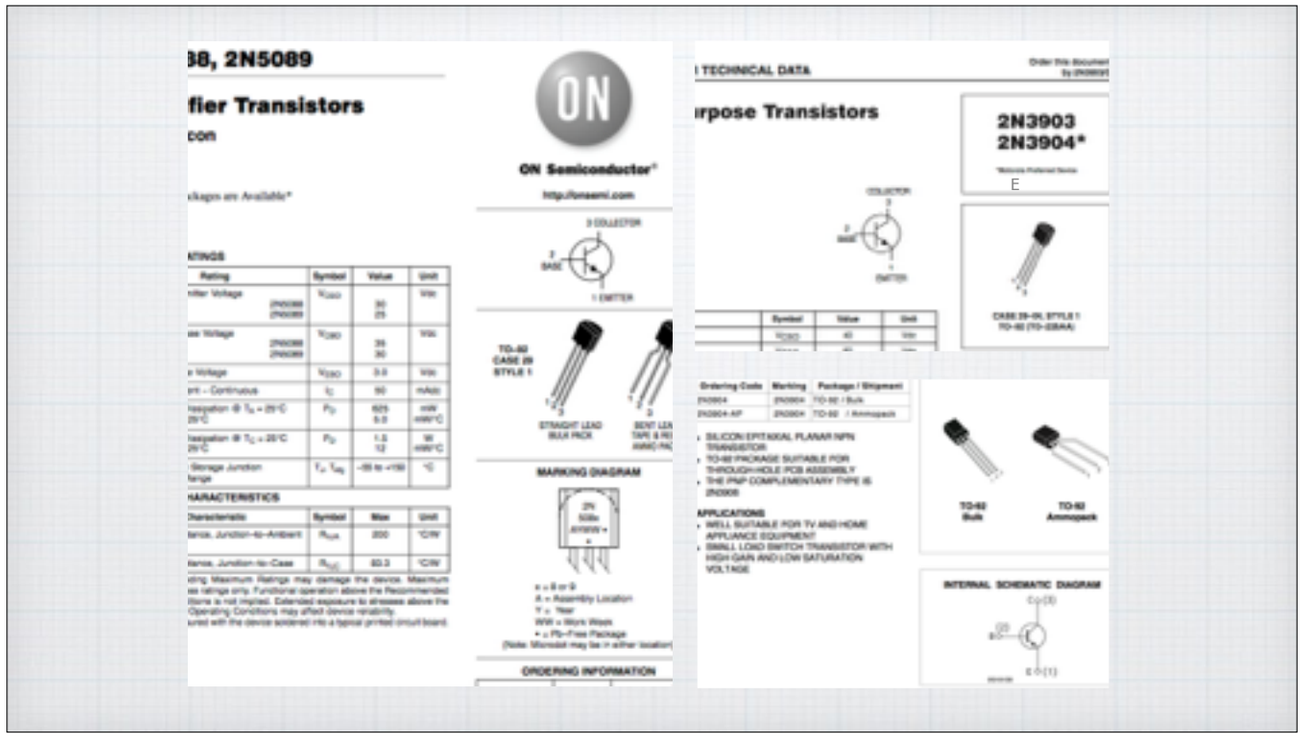

Some examples of transistor data sheets. They will have a little diagram showing which pin is B, C and E.

Components

Transistors

Example - transistor as a switch

When ‘control’ sets voltage on the **B**ase, current can flow between **C**ollector and **E**mitter

- The LED turns on

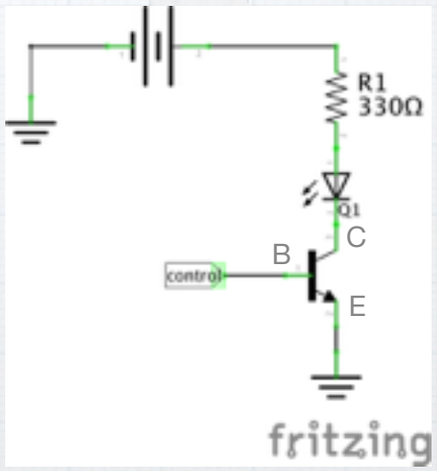

Transistors can also be used as amplifiers - a small amount of current on B can let through a bigger current between C and E. The incoming audio signal is connected to B, and then a higher voltage is allowed to flow between C and E… which is used for the output audio.

Build 3.

Distortion pedal

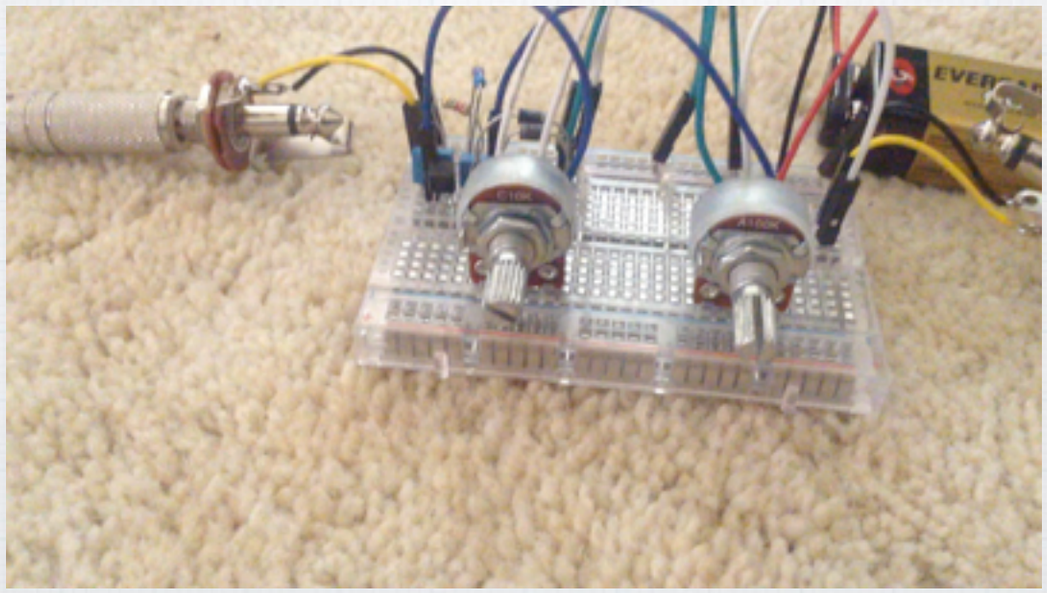

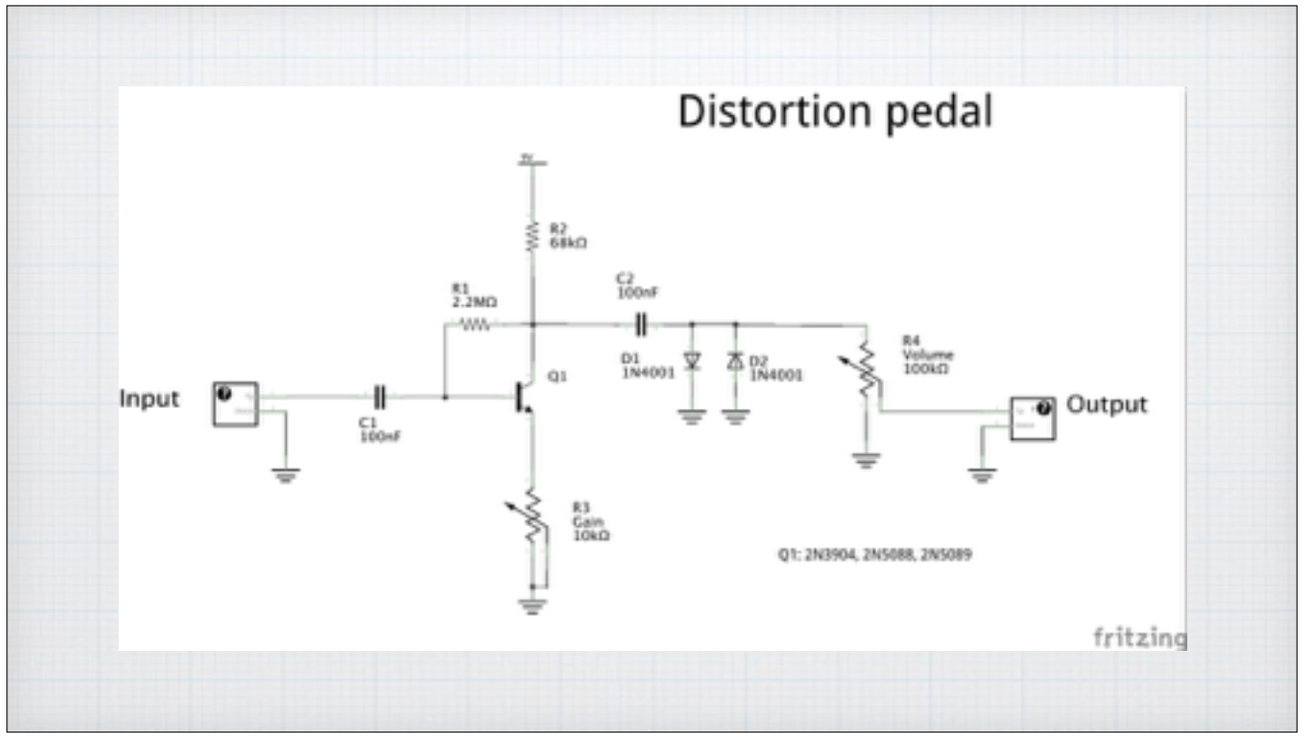

2 capacitors, 2 resistors, 2 variable resistors, a transistor and some diodes. That is all there is to a basic distortion pedal.

Build steps

- Start by connecting your power
- Next, connect your input jack. The **sleeve** goes to ground. The **tip** connects to a new column on the board.

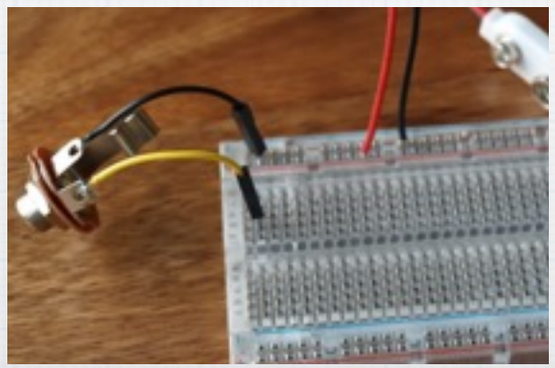

Red power goes into one of the holes in the red row at the top. Similar for black.

Build steps

- One side of the capacitor connects to the input, so place one leg in the same column

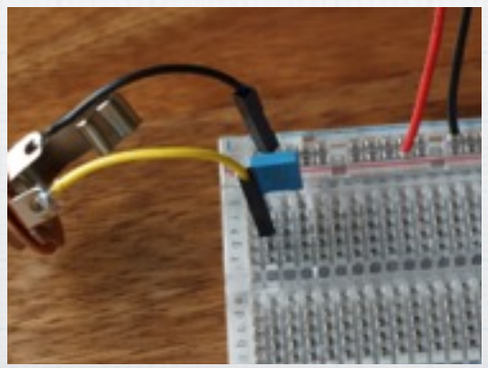

As this is a film capacitor, it has no polarity, so it doesn't matter which leg you connect to the input. Just as long as one of the legs shares a column on the breadboard with the input connector.

Build steps

- The transistor comes next - place the three legs in three columns
- Work out which legs are **E**, **C**, **B**
- There is a 2.2M resistor connecting **B** and **C** legs - put that in too

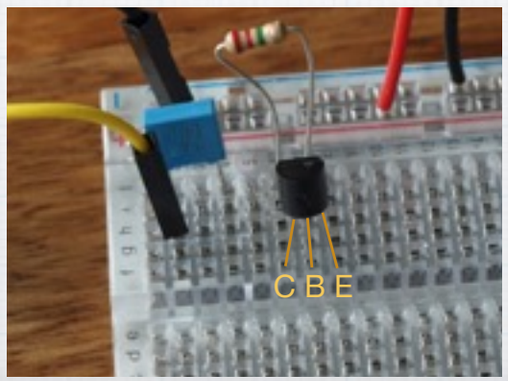

Build steps

- Use the 68k resistor to connect **C** pin of the transistor to the 9v row

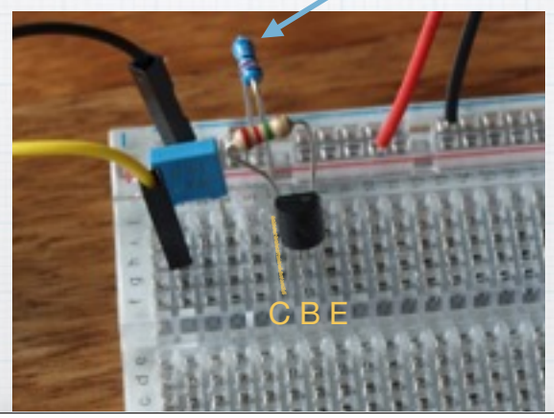

Build steps

- We also need the other capacitor leg to connect to the **B** pin of the transistor

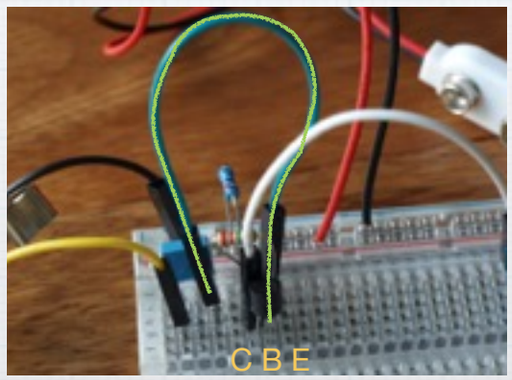

Build steps

- The **C** pin also goes to a 2nd capacitor. It's looking pretty crowded, so we can use some wire to spread things out
- The two diodes go from ground to the 2nd capacitor's other leg

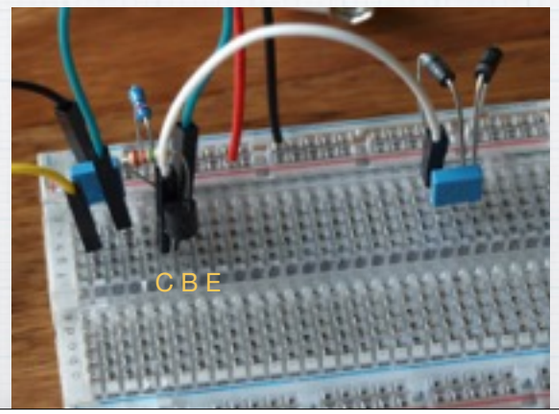

Diodes can vary. Different types, LEDs for crunch, 1n4148 for buzz, or try asymmetric - two in one direction and one in the other, or combinations of all of the above.

Build steps

- The volume pot can go in next. Pin **3** is connected to our diodes and capacitor

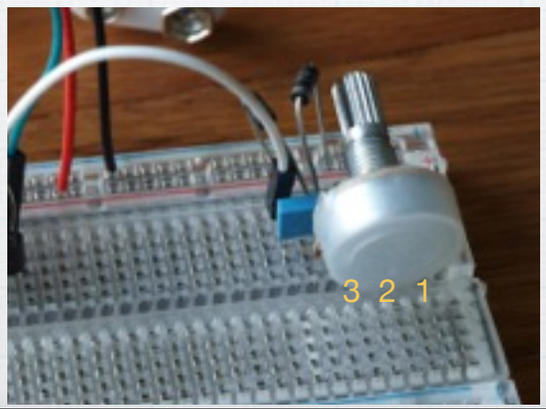

Build steps

- Pin **1** connects to ground
- Pin **2** connects to the tip of our output jack

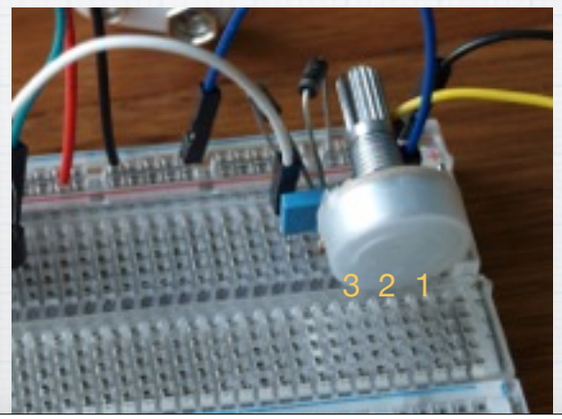

Output jack sleeve goes to ground

Build steps

- Final part is the gain pot
- Pin **3** goes to the **E** pin of the transistor - use a wire

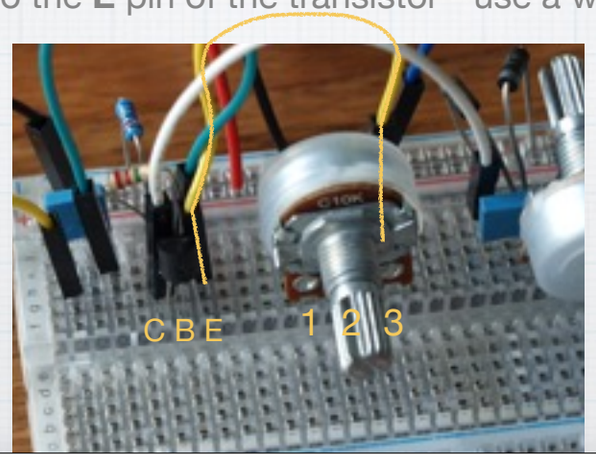

Build steps

- Pins **1** & **2** both connect to the ground row

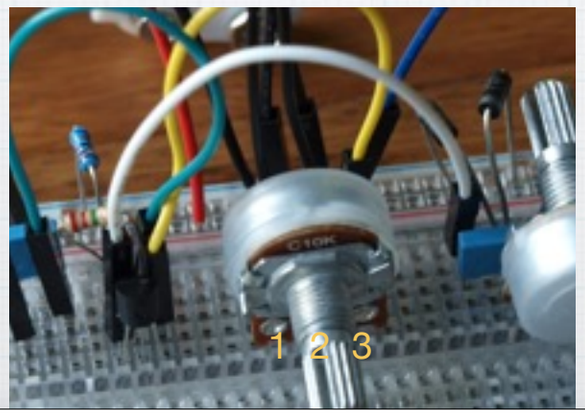

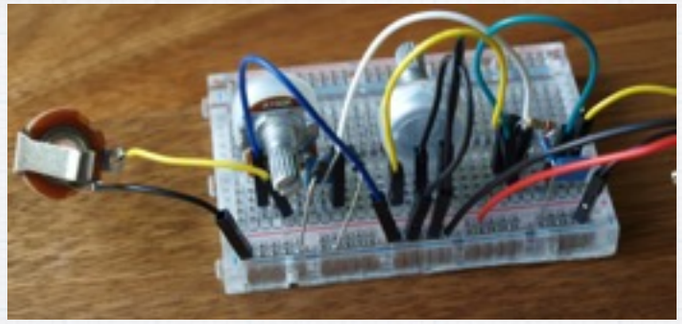

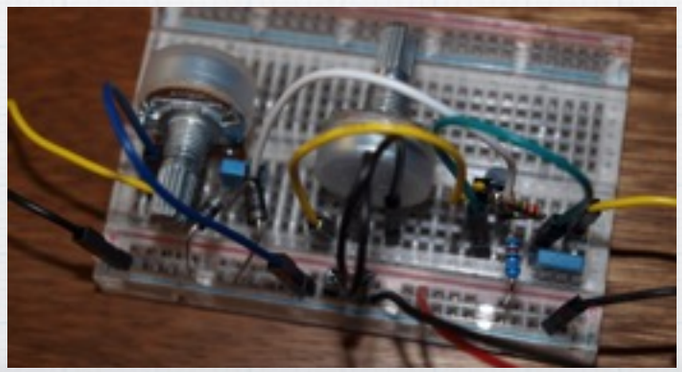

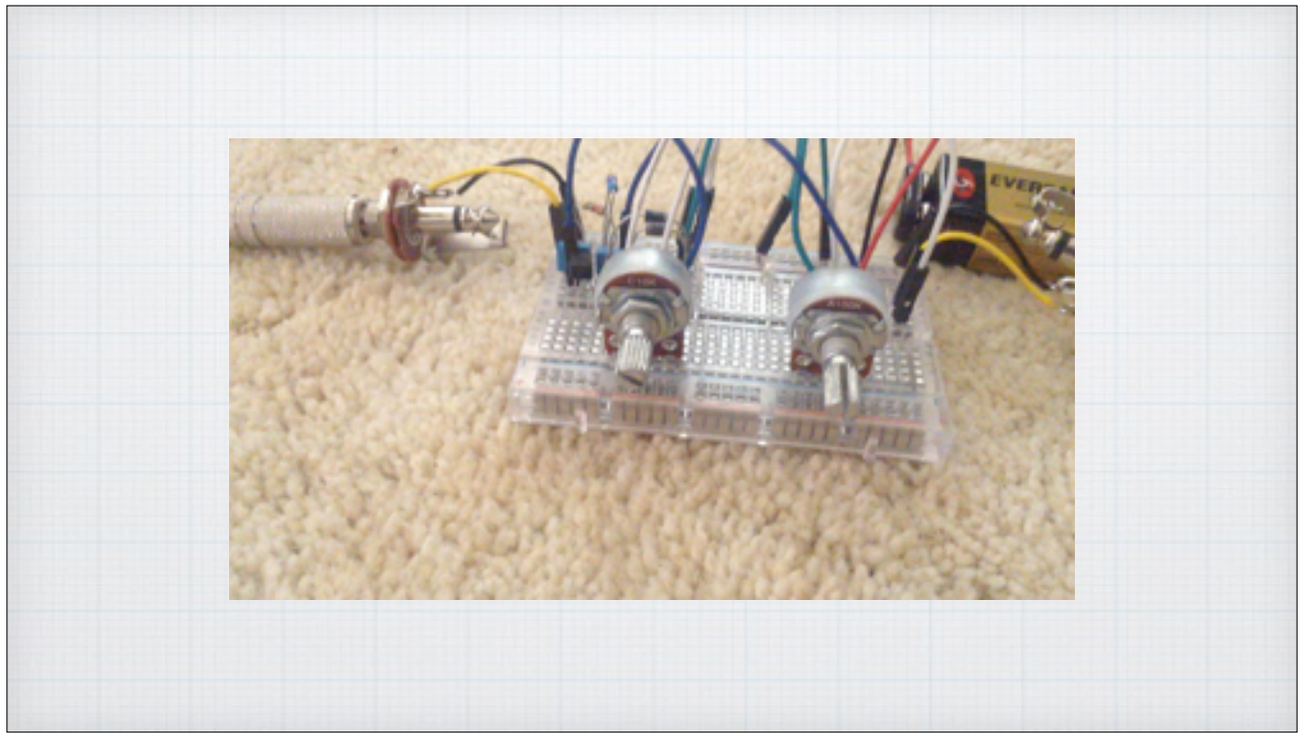

This is another build of exactly the same schematic. You can see that I've put things in completely different places on the breadboard, but it is still the same circuit, because each part is connected to the other parts in the same way. The connections are the important bits, not the physical placement on the board.

…and now, back to

More components

ICs

- **Integrated circuits** (ICs) are chips that have other miniaturised components inside them
- They will have a number identifying them, and a data sheet describing what they do
- They have legs that connect the internal circuits to your circuit
- They have polarity - the little notch in one end shows you which way

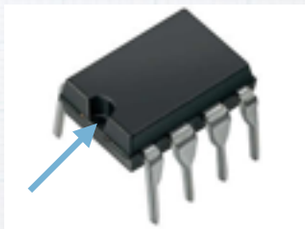

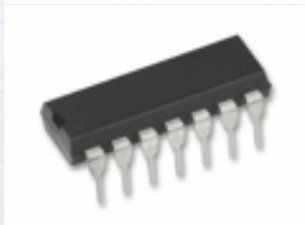

Components

ICs

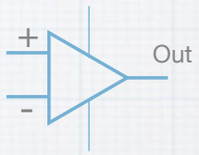

- A common IC for guitar pedals is an **operational amplifier** (op-amp)
- They amplify the signal, much like a transistor can, but they will have different performance
- **LM741**, **LM386**, **TL072** are some examples of op-amps that you may see in schematics
- Some chips may contain 2 or 4 op-amps in the same package

Low noise, low power, high gain, etc, will be characteristics of different op-amps.

Components

Switches

- A switch is a mechanical way to connect or disconnect a wire
- Switches are identified by how many **poles** they have, and how many **throws**

Components

Switches

- **Poles**: how many wires can the switch change at once?
  - A **Single Pole** switch can connect or break one part of your circuit

  - A **Double Pole** switch can connect or break two parts of your circuit at the same time

Components

Switches

- **Throws**: how many useful positions does the switch have?
  - A **Single Throw** switch can connect your wire to one other wire.
    It's **on-off**.

  - A **Double Throw** switch can connect your wire to two alternative wires.
    It's **on-on**.

Components

Switches

- Some common switches:
- **SPDT** - single pole, double throw. It can change one wire, to either of two positions
- **DPDT** - double pole, double throw. It can change two wires simultaneously, to either of two positions

Switches

More switch terminology:

- **Momentary** - means that the switch won't stay where you push it. It will spring back
- **Centre off** - means that the switch has another position that will disconnect all the wires. Sometimes a DPDT switch with centre off will be called an **on-off-on** switch

Your next pedal build...

- Picking a schematic
- Ordering parts
- Soldering options
- Switches, power and jacks
- Enclosures
- Finishing it off (making it look pretty)

Your next pedal...

Picking a schematic

There are a lot of great free schematics available:

- Runoffgroove - great place to start
  http://runoffgroove.com
- AMZFX
  http://www.muzique.com/schem/
- General Guitar Gadgets
  http://www.generalguitargadgets.com/how-to-build-it/technical-help/schematics/

Your next pedal...

Picking a schematic

A lot of places have schematics for their products. You can try before you buy…

- http://www.madbeanpedals.com/
- http://1776effects.com/
- http://www.grindcustomsfx.com/shop/
- http://www.diyguitarpedals.com.au/

DIY Guitar pedals is Australian based, and has a good range to get started on.

Your next pedal...

Picking a schematic

- **Know your limits**

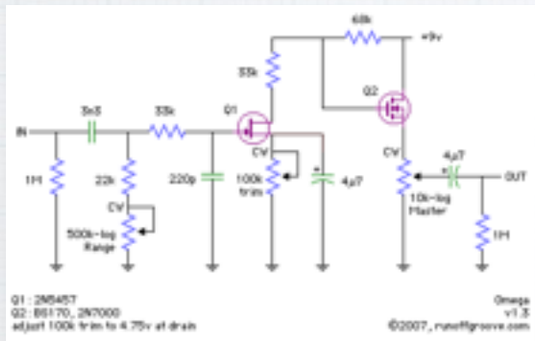

Beginner

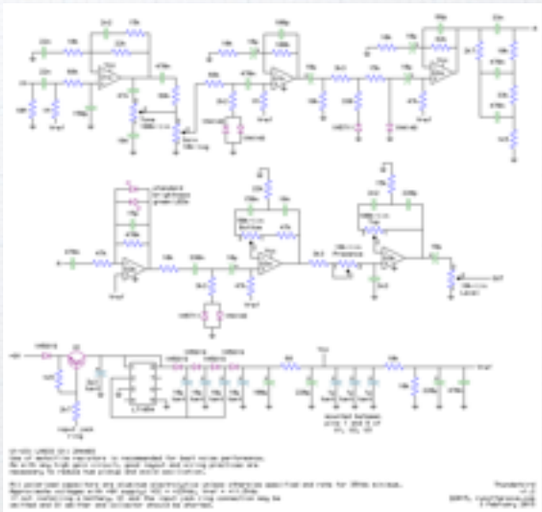

Not beginner

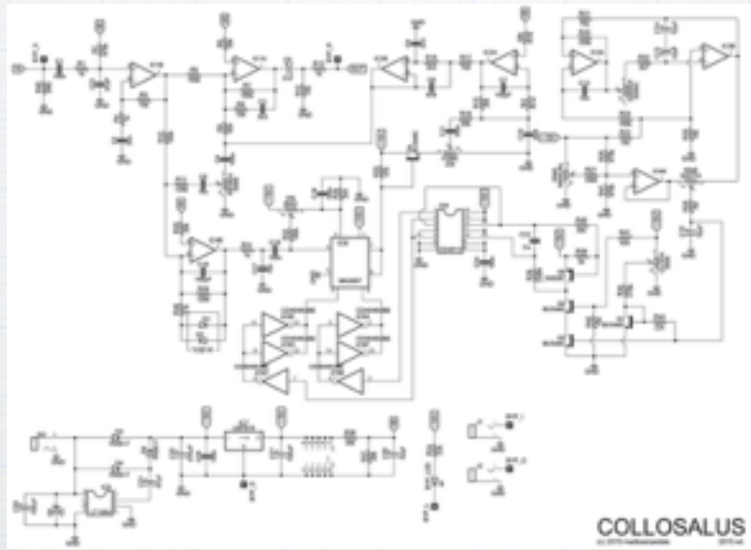

No, seriously, not beginner

Your next pedal...

Ordering parts

General electronics suppliers (in Australia):

- Jaycar - physical stores!
  https://www.jaycar.com.au
- Element 14 - good range, small orders OK
  http://au.element14.com
- RS Australia - free shipping! but sometimes you need to order 50 resistors when you wanted one.
  https://www.rsaustralia.com

Jaycar is good if you want to see before you buy, or ask questions in store. Range of switches is good, basic range of normal components. Stomp switches are expensive.
Element 14 and RS Australia are aimed at bigger orders, but they will happily take your money. Their ranges are mind boggling. You may just want one resistor, but they will have 15 different slight variations on that resistor, and prices may be for 1, 50, or 2000 minimum purchase. RS has free shipping with no minimum spend - hooray! Element 14 charges for shipping, but will usually let you buy things in smaller lots. Element 14 stocks genuine Hammond metal enclosures.

Your next pedal...

Ordering parts

Specialist suppliers:

- Little Bird Electronics - aimed at Arduino, robotics, makers in general - Australian based
  https://littlebirdelectronics.com.au
- DIY Guitar Pedals - good range of pedal related parts - Australian based
  http://www.diyguitarpedals.com.au
- Small Bear Electronics - good range of pedal related parts - USA based
  http://smallbear-electronics.mybigcommerce.com

Small Bear is where most people shop for their pedal stuff. But being in the USA, their shipping charges to Australia can be really high. They do ship quickly, but it will cost you.

DIYGP is Australian based, and has a good range of resistors, capacitors and transistors/ICs. Good prices on DPDT and SPDT switches. I've found them to be helpful.

Your next pedal...

Ordering parts

Specialist suppliers:

- Tayda Electronics - Potentiometers, enclosures
  http://www.taydaelectronics.com
- Pedal Parts Plus - Pre drilled and painted enclosures
  http://www.pedalpartsplus.com
- Mammoth Electronics
  https://www.mammothelectronics.com

Tayda has a great range of cheap potentiometers. They're also good for resistors and capacitors if you can't find something locally. Some of the readily available transistors are good, but sometimes they will have cheap fakes from China. They do reasonably cheap metal enclosures.

Pedal Parts Plus will do enclosures in all sorts of paint finishes, pre drilled per your specs.

Your next pedal...

Ordering parts

eBay

- Great for cheap packs to get started:
  "Resistor pack" -> 400 resistors, 40 values, for $4, free shipping
  "LED 5mm" -> 100 LEDs, 5 colours, for $1.89, 7c shipping
- Cheap knobs. 'Metal' is usually plastic with metallic paint
- Fake transistors - especially from China or Hong Kong
  - J201, 2N5457 are likely fakes on eBay
- Sometimes the quality will be bad. Let the seller know. They will fall over themselves to avoid poor feedback
- Shipping is generally 3-4 weeks from China, but generally free

I've had a reasonable number of successes on eBay - resistors, capacitors and LEDs have been fine, 3PDT stomp switches have been OK, metal enclosures are OK.
Knobs variable - some are good, others are totally not what you ordered, and look cheap.
ICs and transistors can be really hit and miss.
DPDT switches from China - I've had some terrible batches that fail after about 10 minutes of use.
Sockets are generally OK, but I've had one batch that was terribly made.
Sellers will usually give you a partial or full refund if you complain, and you keep the product.

Your next pedal...

Ordering parts

- Watch out for **SMD** parts
  - These are **surface mounted device** parts
  - They are tiny
  - Definitely not for beginners

What I wanted

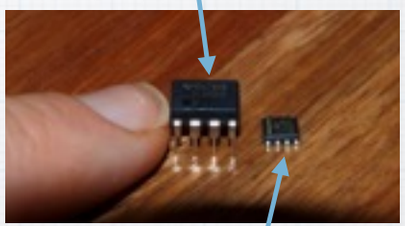

What I ordered by mistake

You don’t want to order SMD parts. It’s kinda embarrassing when you get the package in the mail and open it up and… awwww, man! SMD!?

Your next pedal...

Soldering

Soldering the parts together will make your circuit more robust and permanent

There are several options:

- perma-proto board
- prototype board / perfboard / vero board
- PCB

Breadboard is great for experimenting, but it isn't something you can take to a gig. Or half way across the room even. You want something more permanent once you have settled on the design.

Your next pedal...

Soldering

Perma-proto board is basically the same as a breadboard, but you can solder parts on

https://littlebirdelectronics.com.au/search?type=product&q=perma-proto

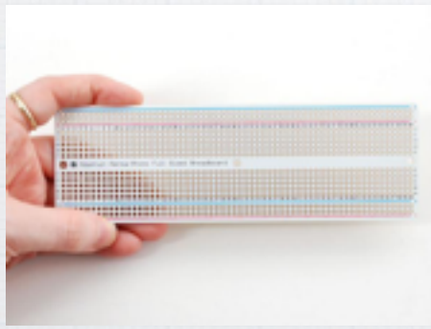

This is a good way to move from breadboard to soldering, as you can just move parts to exactly the same spot for soldering.

Little Bird Electronics has a good range of perma-proto if you want to try it out.

Downside is that your board will probably end up being bigger than if you use other methods

Your next pedal...

Soldering

Prototype board has holes pre drilled, but no connections. You have to do all the connecting yourself

Called perfboard, prototype board, and sometimes vero board

eBay search for “prototype board” - 10 for $2


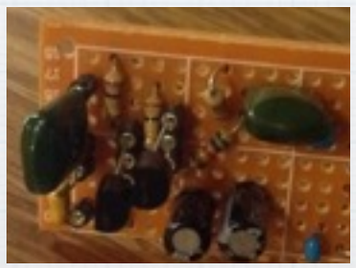


Vero board will usually have strips joined up on the back of the board. You can easily cut through the strips with a knife to disconnect parts, and put a jumper wire on to join up rows.

Sometimes sellers will use the words perfboard, prototype board and vero board interchangeably, so look carefully at what they are selling to see if there are individual holes, or rows joined up.

Your next pedal...

Soldering

Printed Circuit Boards (**PCB)** are a pre-laid out circuit, with holes for you to insert components. They only work with one schematic - you can't just build whatever you like on these

This is probably the easiest method to get soldering a circuit - the layout is done for you

Costs - about $5-20 per board

Your next pedal...

Soldering

Suggested places to buy **PCB**s from:

- http://www.madbeanpedals.com/
- http://1776effects.com/
- http://www.grindcustomsfx.com/shop/
- http://www.diyguitarpedals.com.au/
- https://aionelectronics.com/diy-pcb-projects/

The PCB will come with a schematic, list of components you need to buy, and a build document to help build. The site above also have good post sales support, and forums for getting help

There are heaps more out there…

Again, check out diyguitarpedals.com.au because it is local, so you're not going to have to wait 3 weeks for things to arrive. The guy who runs it is also very helpful, and stocks parts as well, so you can get most things from the one place.

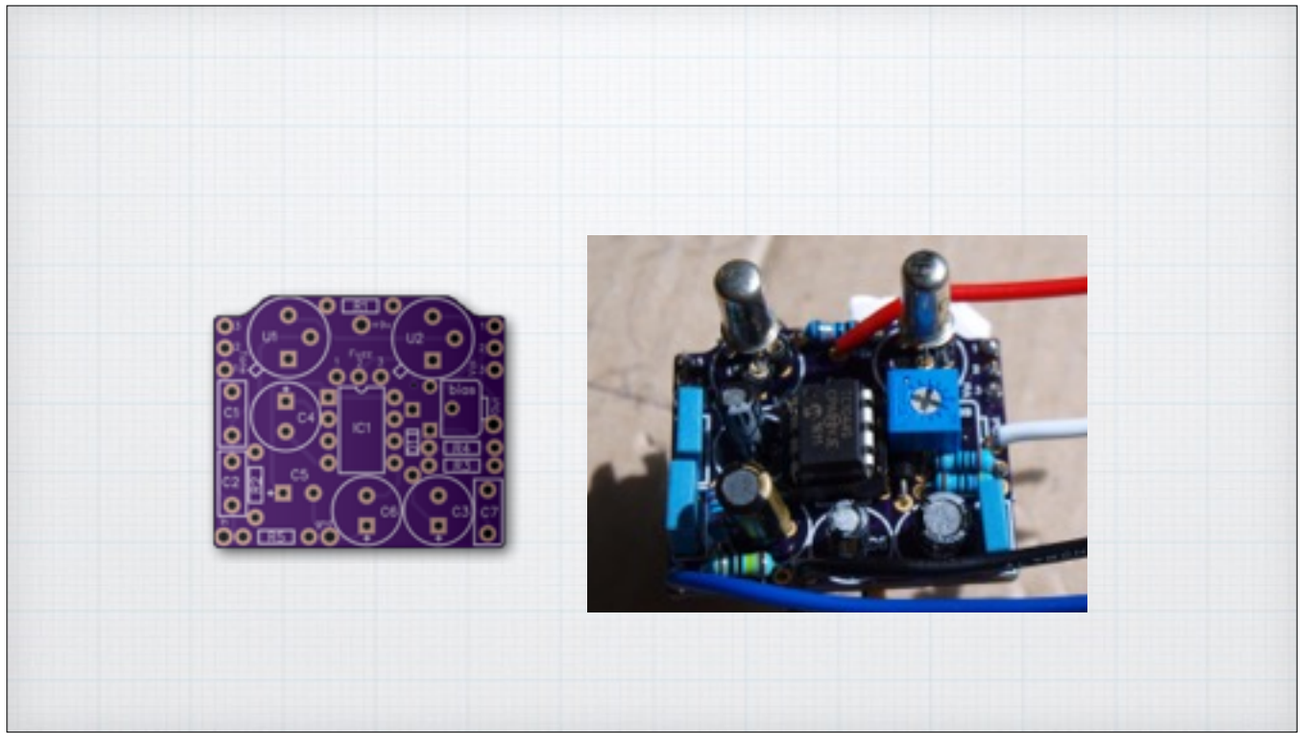

Example - the “FaceMaster” from DIY Guitar Pedals.

Your next pedal...

Soldering

Advanced - You can also create your own PCBs

- At home - using a laser printer, an iron, some copper coated board, and acid. YES, **ACID**.
- On the internet - upload your board layout, and have it manufactured for you:
  - Fritzing.org
  - OSHpark.com

This is really a more advanced part of pedal building - if you've got your own schematic that no one else has a PCB for, and you want to make a board for others to use, then make your own.

Your next pedal...

Soldering

Soldering hardware requirements:

- Soldering iron
- Solder
- clampy thing
- Wire cutters
- Wire strippers

Jaycar, Element 14, RS Australia, Little Bird Electronics will have these sorts of things. Even Bunnings will have a cheap soldering iron.

Your next pedal...

Power

External power is easier than changing batteries all the time. It also gives you more room in your enclosure if you don't have to cram a battery in as well.

- 2.1mm DC power socket is standard
- 3 prongs: +, -, and a switch to connect a battery through
- Buy these anywhere - eBay is fine

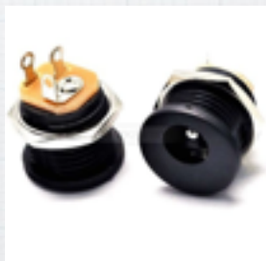

Your next pedal...

Power

Lots of home appliances use the same 2.1mm socket. But they are mostly ‘centre positive’ - the centre prong is +

Guitar pedals are ‘centre negative’ - the wires have been swapped. Because… tradition.

You can make your own pedal power supply using a 9v wall adaptor from another appliance - but you may have to cut the wires and solder together ‘backwards’ to get centre negative

A note on wall adaptors from other appliances. Although they may say ‘9v’ on them, that isn’t necessarily true, especially for older appliances. You can check the actual voltage using a multimeter. If it’s over about 10v or so, you should learn how to use a voltage regulator to bring the voltage back down to 9v. Have a look at the L7809 voltage regulator IC.

Your next pedal...

Jacks

Guitars use 6.35mm (1/4 inch) **mono** audio jacks

- Buy these anywhere - eBay is fine (usually). Better quality on the specialist sites
- You can use a **stereo** jack on your input socket - it can be wired to disconnect your battery if there is no guitar connected

I've had some shoddy jacks from eBay before, it seems to be pot luck. They are much cheaper from eBay though.
There are more expensive ones out there on the specialist sites, some of which are specially designed to fit in smaller enclosures.

Your next pedal...

Stomp switch

It wouldn't be a stomp box without a stomp switch!

- eBay is much cheaper for these switches:
  - Search for '3PDT stomp switch'
  - $2 each on eBay
  - $12 each at Jaycar

- It has 3 poles - one to switch the input, one to switch the output, and one to turn on an LED

Wiring it up? See:

http://www.madbeanpedals.com/tutorials/downloads/MBP_FootswitchWiring.pdf

Some people will not use a 3PDT switch, as they can fail after lots of stomping. They might use another switching method - such as optical bypass, or magnetic relays. That's more advanced stuff, I think the standard 3PDT switches are fine for beginners.

Your next pedal...

Wire

- 24AWG wire is quite skinny - nice and bendy, but it can be hard to make stay put
- 22AWG wire is thicker, doesn't bend as much, but can be harder to insert into the holes on a PCB or switch
- **Stranded** wire will bend around, whereas solid core wire is not flexible. Solid core wire will sometimes snap if it is moved too much
- **Shielded** wire has an extra cover of copper foil, to stop interference from nearby components
- Buy yourself a pack of different colours, to make builds easier - eBay or DIYGuitarPedals.com.au

I've tried shielded wire, but I don't know that it makes a great deal of difference for most pedals. If you have a really high gain pedal it might help stop unwanted noise.
Shielded wire is harder to strip, harder to bend, and harder to solder.
I tend to stick to stranded 22AWG, or 24AWG.

Your next pedal...

Enclosures

Enclosure is a fancy word for the box you put all the stuff into…

It needs to be **metal** to stop interference. Usually aluminium.

- The standard for pedal enclosures is the **Hammond** brand
- Sizes include 1590A, 1590B, 1590BB, 1590D, 125BB
- Element14 has a good range - search for “Hammond stomp”
- Tayda has a range of imitation enclosures
- eBay imitations - search for “1590B”
- Pedal Parts Plus - pre drilled, fantastic colours…

If you’re working to a PCB with build documents, they will usually mention the size enclosure to use. Make sure you read that before you order an enclosure, and definitely check everything fits before you start drilling holes for knobs and switches.
I’ve purchased the genuine Hammond enclosures from Element 14 - they were beautifully made. They also do a trapezoidal shape box that is all of the awesome. They can be, however, quite expensive. $15-$25 for the enclosure.
Cheaper eBay copies may not be made to the same tolerances, but they are serviceable, and about half the price.
Tayda boxes are reasonable, I’ve purchased a couple and they were fine, but the paint may not be perfect. Your experience may vary - it’s well worth trying them out.

Your next pedal...

Finishing

Your can finish your enclosure however you like:

- Paint
- Ink stamps
- Decals
- Printed sticky labels
- Markers
- Etching (again with the acid)
- LASERS!!!
- You may want to spray a clear coat over the top of your finish, to protect it

Really, the finish is up to you. Go nuts. It can be as elaborate or simple as you like.

Your next pedal...

Finishing

- **Knobs** - cheap ones on eBay are usually plastic, but you can get some good deals.
- Plastic or metal ones from other sellers can add a bit of class
- Try bigger or smaller knobs to change the look of your pedal
- Note that there are different size shafts on potentiometers, some knobs won't fit on some potentiometers.
  - **Knurled** knobs refer to the vertical lines on the potentiometer shaft

Even if an eBay knob says 'metal', if it's cheap, it will probably be plastic with a metallic paint finish.
Buy knurled knobs for knurled potentiometers. For smooth potentiometers, you will need to buy a knob that has a small locking screw built in.

If you don’t like the eBay knobs, have a look at DIYGuitarPedals.com.au, Element 14, RS Australia, Jaycar, Small Bear Electronics, Little Bird Electronics… they will all have different stuff.

Your next pedal...

Example finishes

Old tobacco tin. Don’t smoke kids. You’ll die a painful death, and then your relatives will make guitar pedals out of your tobacco tin leftovers.

Fuzz face build in a tin that a watch came in.

Sticky printer ‘paper’ - it’s actually a clear PVC that you can put in your inkjet. It will only be useful on light coloured enclosures - your printer can’t print white ink!

A few more with PVC printer paper, and one with just texta writing.

An auto wah pedal… with duck heads knobs. Why not?

The “Thor” with all the writing in Viking runes… well, as near as I could work it out, translating into Icelandic then converting to the old Viking alphabet.

Also, two in plastic enclosures. If you touch the switches, then your amp will pick up local radio stations. Shows how important the metal shielding is - use metal enclosures!

Your next pedal...

Example finishes

- Check out MadbeanPedals forum for more example builds:
  - http://www.madbeanpedals.com/forum/index.php?board=5.0
  - http://www.madbeanpedals.com/forum/index.php?topic=16225.0

Your next pedal...

Getting help

What do you do if your next pedal doesn't work? (Or the one after that…)

- Buy a **multimeter** and learn how to use it
- Join a forum to get help:
  - http://www.madbeanpedals.com/forum/
  - http://freestompboxes.org/

I frequent the Madbean forum, people seem to be pretty helpful there if you need help debugging a problem with your pedal build.
You can get a cheap multimeter from Jaycar, Element 14, RS Australia, etc, for under $20. One that measures voltage and resistance is essential. If it measures current as well that's fine. One that can test transistors for gain values would be ideal, but not essential.

Your next pedal...

Learning more

- Do a course on electronics - check out http://EdX.org/
- Have a look at https://learn.sparkfun.com/tutorials/tags/components/ for tutorials on all sorts of electronics components
- http://geofex.com/ has old but in depth articles about pedal electronics
- http://www.premierguitar.com/articles/21291-build-your-own-stompbox covers the distortion pedal we built today in a bit more detail
- https://www.youtube.com/c/diyguitarpedalsau has some good videos

MIT has some good electronic courses on EdX for free.

Thanks!

Contact : dev@graybloomfield.com

All of today's slides, build docs, and a big list of URLs are available here:

http://graybloomfield.com/cw16